534HS Mini-Hermet Pressure Transmitter

Form 1176

The Series 534HS Mini-Hermet pressure transmitter

is a compact loop-powered transmitter. It can be locally ranged in service while maintaining its explosion-proof integrity which differentiates it from non-serviceable instruments. Its performance is comparable to full-size conventional transmitters. The Series 534HS is suitable for hazardous locations and hostile environments where space is limited. They meet those applications where low-cost, continuous monitoring is perferred.

Features

- Ranges from 5000 to 15000 psig
- 0.25% accuracy
- 4-20 mA, loop powered
- In-service calibration
- EMI/RFI protection
- Intrinsically Safe and explosion proof
- NEMA 4X, IP 66 housing

534HS

Product Specifications

Accuracy	+0.25% of calibrated span (Linearity, Hysteresis and Repeatability)
Turndown	5:1
Zero Offset	+10% URL
Temperature Range	
Compensated	-20 to 160°F (-29 to 71°C)
Ambient	-40 to 185°F (-40 to 85°C)
Process	-40 to 250°F (-40 to 121°C)
Storage	-40 to 185°F (-40 to 85°C)
Temperature Effect	+1% of URL/100°F @ -20 to 160°F
Long-Term Stability	+0.5% URL per year
Over-Pressure Protection	1.5X URL for 5K 1.2X URL for 10K, 15K
Response Time	< 25 ms
Supply Voltage	11-30 VDC
Output	4 to 20 mA (1-5 VDC optional), loop powered
Loop Resistance	750 ohms @ 24 VDC
Circuit Protection	Reverse polarity and surge protected
Construction	316SS housing (CF8M)
Process Connection	1/4" or 1/2" NPT(F)
Electrical Connection	
Size	1/2" NPT(M)
Termination	24 AWG shielded cable, 18-inch length
Wetted Materials	316L SST port, ELGILOY diaphragm (standard)
Shipping Weight	1.8 lb. (0.7 kg)
Warranty	5 years

Design and specifications are subject to change without notice. For latest revision, see www.sorinc.com.

534HS Mini-Hermet Pressure Transmitter

How to Order

Sample Model Number

534HS - TN 5K - P9 - C 1A - NC

534HS Mini-Hermet pressure transmitter with 4-20mA output, 0-5000 psi, 1/4" NPT and optional NACE certification.

2 Range

0-5000 psi (0-350 bar)	5K
0-10000 psi (0-700 bar)	10K
0-15000 psi (0-1000 bar)	15K

1 Output

4-20 mA	TN
1-5 VDC (requied TL accessory)	VN

3 Process Connection Size

1A	1/4" NPT(F)
2A	1/2" NPT(F) (N/A in 10K or 15K Ranges)

4 Accessories

BB	Cleaned for industrial oxygen service
CS	CSA Approved
NC	Compliance to NACE Certification MR0175/ISO 15156
PK	Pipe mounting kit
PP	Fiber tag with customer specified-information
PY	Powder coat epoxy coating. No coating on stainless steel parts or plated screws. (500 hrs - salt spray)
RR	SS tag wired to control with customer-specified information
TL	SS junction box with terminal strip
TT	SS nameplate affixed to housing with customer-specified information
VV	Fungicidal varnish
YY	Epoxy coating. Exterior only. Polyamide epoxy with 316SS pigment. (200 hours - salt spray)

MAG DRIVER for tamper-proof zero and span adjustments P/N 9003-308

534HS	TN	5K	P9 C	1A	NC	← Model Number

Agency Approvals

Approved	Safety Method	Approval	Model(s)
CSA	Explosion Proof Intrinsically Safe	Class I, Groups A, B, C & D; Class II, Groups E, F & G; Class III, Divisions 1 & 2	534HS-xxxxx-P9-xxx-CS

Test Certificates

	Certificates	C1	C2	C3	C4	C8	B1	B7	A1	A2	A3	A4	A5
Series 534HS	Calibration	◆					◆	◆	◆	◆	◆	◆	◆
	Hydrostatic Pressure Test		◆				◆			◆	◆	◆	◆
	Inspection Report			◆			◆	◆			◆	◆	
	Compliance / Conformance				◆			◆	◆	◆		◆	◆
	Typical Material of Wetted Parts					◆	◆	◆	◆	◆	◆	◆	◆

534HS Mini-Hermet Pressure Transmitter

Dimensions

Dimensions shown are for reference only. Contact the factory for certified dimension drawings.
Linear = mm/in.

534HS

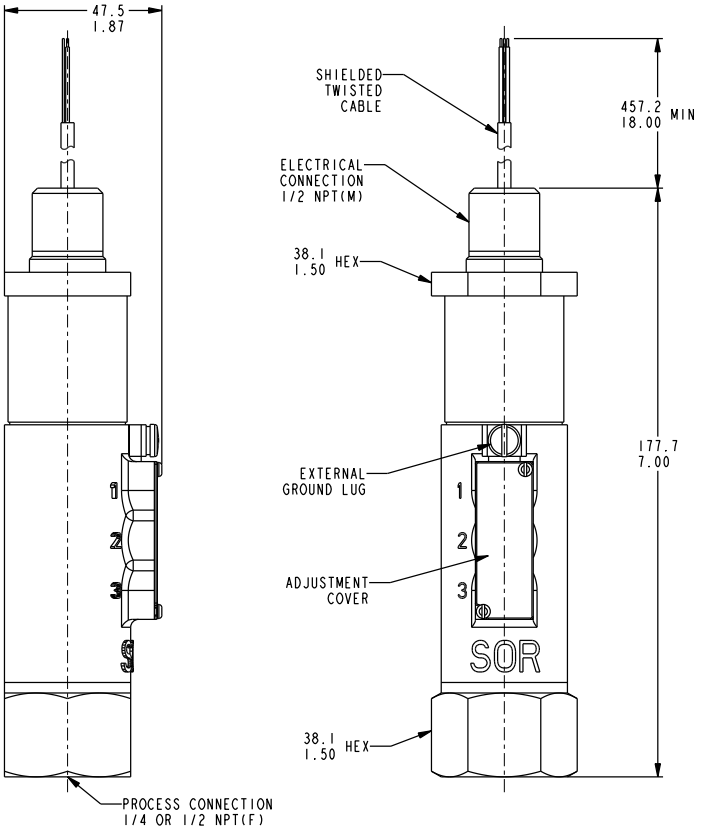

Drawing 0091119

534HS with TL Accessory

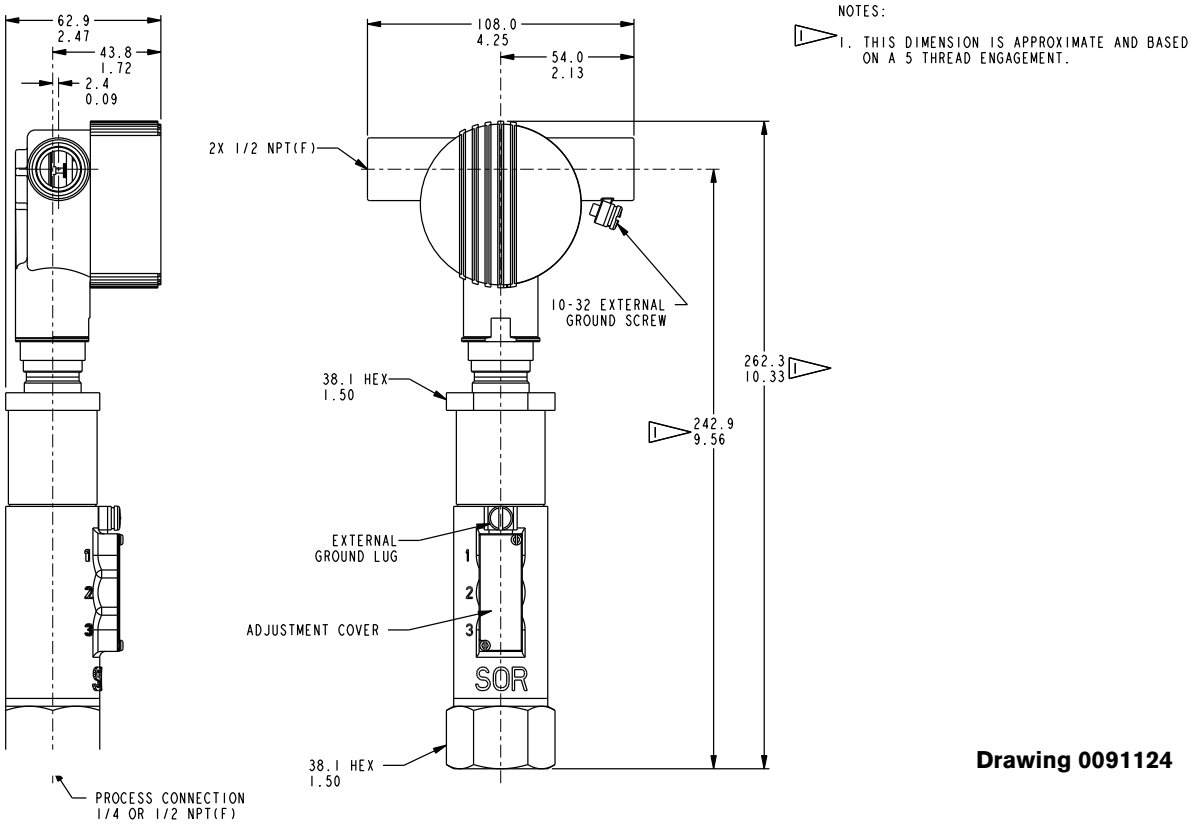

Drawing 0091124

SOR® offers a full line of commercial-grade process instruments.

echOsonix®
Level Transmitters

Level Switches

Level

Temperature

Pressure

Flow

Flow Switches

Temperature Switches

Pressure Switches

Process Instrumentation

We Deliver Quality On Time

SOR Inc.
14685 West 105th Street
Lenexa, Kansas 66215

Phone 913-888-2630
Toll Free 800-676-6794
Fax 913-888-0767

www.sorinc.com
www.echOsonix.com

SOR Europe, Ltd.
Star Road
Partridge Green, Sussex
RH13 8RA, United Kingdom

Phone +44-140-371-1331
Fax +44-140-371-0177
sales@soreur.co.uk

SOR - China
Room 903, No. 10 Building
Wan Da Plaza
No. 93 Jian Guo Road
Chao Yang District
Beijing, China 100022

Phone +86 (10) 5820 8767
Fax +86 (10) 5820 8770

Registered Quality System to ISO 9001:2000

Form 1176 (08.08) ©2008 SOR Inc