SEE MORE AT SORInc.com

Request Quote

MEASUREMENT AND CONTROL

RF Capacitance Level Controls

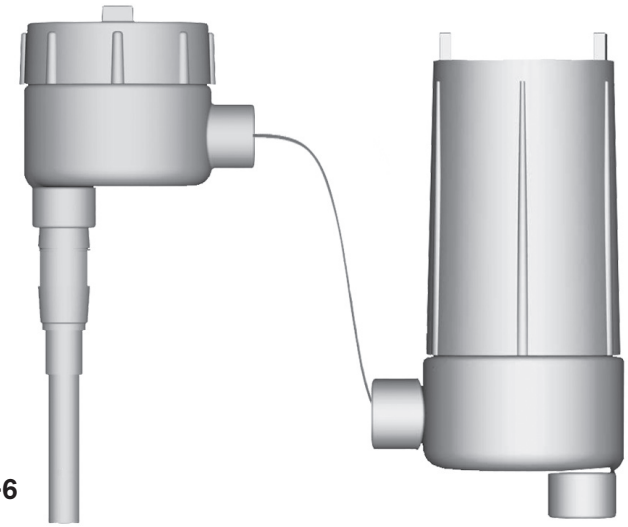

CAC-8A-00-6

681R7

Features and Benefits

- Reliability
- Low maintenance costs
- No moving parts
- Interface measurement with on/off and continuous output
- Unaffected by changes in pressure, temperature, specific gravity, vapor or density
- Versatile - can be used with both conductive and non-conductive substances. Manages a variety of liquids, granular solids, powders and slurries.
- Dielectric range is unlimited
- 316SS or Telflon® probes
- Can be used in virtually every type of chamber
- Set point/span are completely adjustable
- Withstands temperatures up to 400°F (204°C)
- Withstands pressure up to 2000 psig (138 bar)

Agency Listings/Certification

- Select models with CSA, FM, IECEx and INMETRO
- Meets most code and customer requirements.

RF Capacitance Level Controls

Operating Principle

RF Capacitance level controls are based on an electronic device called a capacitor. The capacitor is a device that stores energy. This energy is not stored in the probe; rather, the RF Capacitance level control is merely measuring how much energy can be stored. The amount of capacitance the RF Capacitance level control is measuring is extremely small and is measured in picofarads (1×10^{-12}) farads.

The capacitor is made up of two conductive plates parallel to each other. Separating the two plates is an insulator.

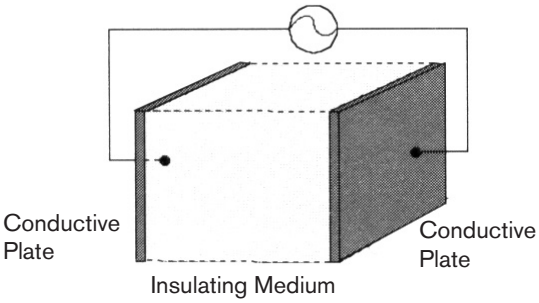

The amount of energy a capacitor can store is influenced by several things. First, a larger plate area results in more space to store energy. Second, more space between the plates reduces the amount of energy storage. Finally, a higher dielectric constant media can contain more energy than a lower dielectric media. The dielectric is where the actual capacitance is developed. The following chart shows the dielectric constant and conductivity for some sample materials.

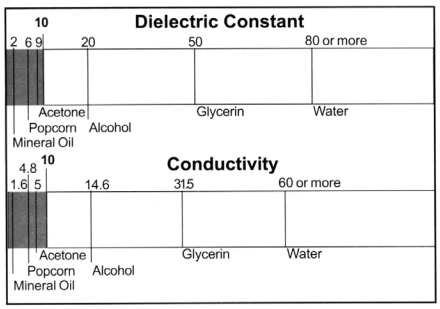

Substances are considered either conductive or non-conductive. Non-conductive materials have a dielectric less than 10 or a conductivity less than 10µsiemens/cm. Conductive materials have a dielectric constant greater than 10 or a conductivity greater than 10 µsiemens/cm. Interestingly, there is a similar relationship between dielectric constant and conductivity. Non-conductive substances tend to have low dielectric constants and conductive substances tend to have high dielectric constants.

Non-Conductive Substances

The structure of the capacitor actually changes in a level application. One plate is the probe and the other is the wall of the tank (see following figure). These do not change, nor does the distance between them. The only thing that changes is the dielectric constant. Air has a dielectric constant of one; anything else you measure will have dielectric value greater than one.

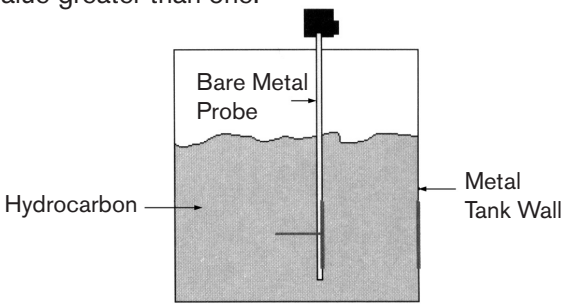

When the substance level increases, the dialectic of the substance is replacing the air and causes the capacitance to increase. The preset capacitance value is equal to the set point level wanted and trips a switch when the level is reached. The transmitter creates a linear output in relationship to the capacitance measured.

Conductive Substances

The substance between the two plates has to be an insulator in order to have a capacitor. When a conductive material is between the plates, an electrical short is created. This, in turn, signals the level transmitter to indicate a high level. A Teflon insulator around the sensor will prevent this from happening, as the figure below demonstrates.

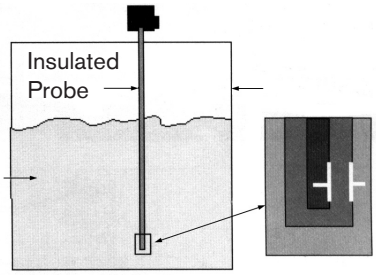

An electrical connection is created through the conductive substance from the tank wall and the Teflon probe. When the level in the tank rises, the capacitor is created by the metal probe rod, the substance being measured and the probe insulator (Teflon), where the sensor rod and substance are the plates and insulator is the dielectric. This means that rather than measuring the dielectric of the substance, the dielectric of the probe where it is covered by the substance is being measured.

Restrictions of RF

- Sensitive to changes in material dielectric (**Note:** dielectric compensation additives help, but the liquid can stratify.)
- Normally needs field calibration, which requires a change in level
- Dependent on contact with the substance being measured
- Conductive coatings can build up on the sensor and create false readings

The Difference Between RF Capacitance and RF Admittance

Contrary to popular belief, there really isn't an application difference between RF Capacitance and RF Admittance. The only difference is in the electronics; the overall performance of the unit remains the same. That's where the "RF" part comes in, as the following will explain:

RF measurement is actually measuring capacitance, as well as capacitance reactance (impedance). The energy (Radio Frequency) is traveling from one conductive plate to the other. The following equation represents capacitance reactance:

$$X_c = \frac{1}{2\pi f c}$$

where
X_c = Capacitance Reactance (Ohms)
2π = Radians in a 360° cycle of AC (alternating current)
f = Frequency of AC (hertz)
C = Capacitance of system (in farads)

When there is a conductive coating on the probe, a non-RF unit will indicate the level at the top of the coating. By looking at the conductivity, an RF system can reduce the error caused by the coating (see following figure). Consider this: At the actual level, the amount of capacitive reactance (impedance) is low because the space between the tank wall and probe is filled with a conductive liquid. However, at the coating on the probe, there is also a large air space between the probe and tank wall. This air space results in a high amount of capacitive reactance.

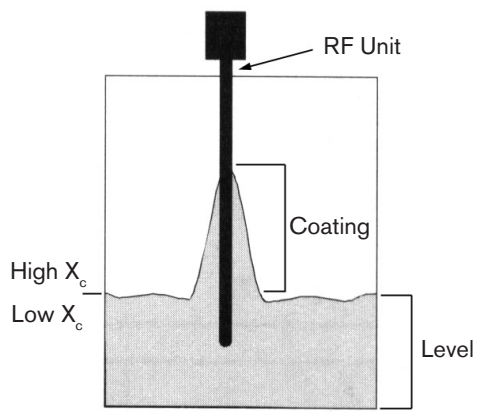

The Difference Between RF Capacitance and RF Admittance

Look at the formula for capacitive reactance. Since we are striving to measure the capacitance, C cannot change, and 2π is a constant and cannot change. The only thing left we can change is the frequency. If the frequency is increased (RF), the capacitive reactance decreases.

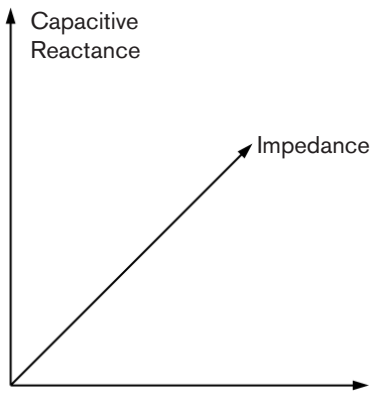

The level is represented on the vertical axis in these two graphs. Changes in the resistance are represented on the horizontal axis. A vector representing a combination of the two (impedance) is shown to the left. The inverse of this graph is shown below.

As you can see, an "admittance" measurement is just the inverse of a capacitance measurement. The important part, as previously stated, is the "RF."

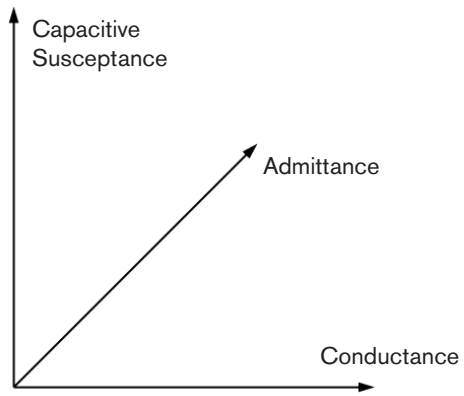

Use this chart to select the RF instrument that best meets your needs.

Designator	Line Power	Loop Power
Single-Point Sensing		
Integral Mount Electronics	651 Pages 5-6	651 Pages 5-6
Integral Mount Electronics with Sensor Monitor (Self-Test)	681 Pages 7-8	681 Pages 7-8
Remote Mount Electronics with Sensor Monitor (Self-Test)	681 Pages 7-8	681 Pages 7-8
Multiple-Point Sensing		
Alarm or Pump Control	660 Pages 9-10	N/A

651 Single-Point RF Switch

The 651 provides basic, single-point switching for use as an alarm or indicator. It's virtually immune to process coatings on the probe, making it a useful solution for many tough level applications. This immunity, combined with the absence of any moving parts, makes the 651 well suited for applications that are difficult for other technologies.

Features

- Economical point sensing
- Suitable for 12 VDC service
- FM Approved, CSA Certified hazardous locations, IEC Certified
- Field-selectable failsafe

Product Specifications

Input Power - Line	120 VAC, 50/60 Hz 240 VAC, 50/60 Hz 24 VDC 12 VDC
Input Power - Loop	12-28 VDC
Output Type - Line	10A DPDT, 250 VAC 10A DPDT, 30 VDC DC rating shown for resistive loads 5A DPDT for 12 VDC input power
Output Type - Loop	8 mA (alarm), 16 mA (normal)
Loop Resistive	780 ohms maximum @ 24 VDC
Adjustment Range	0 to 1000 pF
Sensitivity	0.5 pF
Repeatability	0.5%
Failsafe	Field-selectable
Maximum Current Draw (line power)	12 VDC - 100 mA 24 VDC - 50 mA 120 VAC - 20 mA 240 VAC - 10 mA
Response Time	0.5 seconds
Enclosure Environmental Rating	NEMA 4X; IP65
Electrostatic Discharge Protection	8000 volts (Line) 4000 volts (Loop)
Line Surge Suppression	1000 volts line voltage EMC
Conduit Connection	3/4" NPT
Ambient Temperature Range	-40 to 160°F (-40 to 71°C)
Process Temperature Range	Probe Dependent
Maximum Process Pressure	Probe Dependent
Weight	2.5 lbs. (1.2 kg)

RF Capacitance Level Controls

How to Order

The 651 consists of two parts. The first is the electronics and housing. The second is the probe. For probe types and model numbers, see pages 21-25.

Model Number System

651 K 7-TTYY

651 RF Admittance Switch with 120 VAC power supply, oversized nameplate and epoxy-coated housing.

Power Supply	1
12 VDC	5
24 VDC	6
120 VAC	7
240 VAC	8
12 - 28 VDC (Loop)	9
651K	7

* Electronics and probe must have the same agency to maintain the listing integrity (i.e. CS or AI electronics with CS probe, or FM or FI electronics with FM probe).

2	Accessories & Certificates
AI	CSA Intrinsically Safe*
CS	CSA Explosion Proof Listing* (Not available with power supply 5)
FI	FM Intrinsically Safe*
FM	FM Explosion Proof Listing* (Not available with power supply 5)
MB	IEC Certified Intrinsically Safe*
NM	INMETRO approved*
OD	60-second time delay ON, 0.5-second delay OFF
OF	60-second time delay OFF, 0.5-second delay ON
PP	Fiber tag with customer-specified tag information
PY	Powder Coat epoxy coating. No coating on stainless steel parts or plated screws. (500 hours-salt spray)
RR	SS wired on nameplate with customer-specified information
TT	SS nameplate permanently affixed to housing with customer-specified tag information
VV	Fungicidal varnish applied to housing exterior
YY	Epoxy coating applied to housing exterior (200 hours-salt spray)
	Individual Certificates
C1	Certificate of Calibration
C3	Inspection
C4	Compliance/Conformance
C6	Insulation Resistance
D1	Certificate of Origin
D2	Manufacturer's Certification
TT YY	Model Number

Agency Approval

Agency	Safety Method	Approval	Model(s)
FM	Explosion Proof	Class I, Groups C, D Class II, Groups E, F, G Class III, Division 1	651Kx-FM (Not available with 12 VDC line power)
	Intrinsically Safe	Class I, Groups A, B, C, D Class II, Groups E, F, G Class III, Division 1	651Kx-FI
CSA	Explosion Proof	Class I, Groups C, D Class II, Groups E, F, G Class III, Division 1	651Kx-CS (Not available with 12 VDC line power)
	Intrinsically Safe	Class I, Groups A, B, C, D Class II, Groups E, F, G Class III, Division 1	651K9-AI
IEC	Intrinsically Safe	Ex ia IIB T4	651K9-MB
INMETRO	Intrinsically Safe	Ex ia IIB T4	651K9-NM

681 Single-Point RF Switch with Self Test

Available as an integral or remote-mounted unit, the 681 provides single-point switching, and with its many safe and operation features, is well suited for demanding industrial applications.

Its "Self-Check" function constantly monitors circuit and probe integrity. A dedicated relay (line powered) or current shift (loop powered) indicates if the unit is not functioning properly. An optional, adjustable differential provides control of two set points with one relay, which gives the 681 pump and valve control for maintaining correct process levels.

Features

- Continuous self testing (Self-Check) verifies operation of the unit
- Optional adjustable differential for pump/valve control
- Available as integral or remote-mounted
- Field-selectable failsafe
- Resists process media coating

Product Specifications

Input Power - Line	120 VAC, 50/60 Hz 240 VAC, 50/60 Hz 24 VDC, 12 VDC
Input Power - Loop	10-30 VDC
Output Type - Line	
Alarm	10A DPDT, 250 VAC 10A DPDT, 30 VDC
Sensor Monitor	10A DPDT, 250 VAC 10A DPDT, 30 VDC DC rating shown for resistive loads
Output Type - Loop	
Alarm	8 mA (Alarm), 16 mA (Normal)
Sensor Monitor	24-27 mA
Loop Resistance	456 ohms maximum @ 24 VDC
Adjustment Range	0 to 1000 pF
Sensitivity	0.5 pF
Adjustment Range (Adjustment Differential)	Range I: 0 to 300 pF 0.5 pF sensitivity Range II: 300 to 1000 pF 1.0 pF sensitivity
Repeatability	0.5%
Failsafe	Field-selectable
Maximum Current Draw (line power)	12 VDC - 100 mA 24 VDC - 100 mA 120 VAC - 25 mA 240 VAC - 13 mA
Response Time	0.1 second
Enclosure Environmental Protection	NEMA 4X; IP65
Electrostatic Discharge Protection	8000 volts (line) 4000 volts (loop)
Line Surge Suppression	1000 volts line voltage EMC
Conduit Connection	3/4" NPT
Maximum Remote Distance from Sensor	150 ft. (45.7 m)
Ambient Temperature Range	Probe Dependent
Maximum Probe Pressure	Probe Dependent
Weight	3 lbs. (1.4 kg) plus 2 lbs. (1 kg) for remote

How to Order

The 681 consists of two parts. The first is the electronics and housing. The second is the probe. For probe types and model numbers, see pages 21-25.

Model Number System

681 K 7-TTYY

1 Electrical Housing

Integral Housing	K
Remote housing: 150 ft. (45m) maximum	R

Order remote cable part #2924-113 and specify length in feet

2 Power Supply

5	12 VDC
6	24 VDC
7	120 VAC
8	240 VAC
9	10 to 30 VDC (Loop)

3 Accessories & Certificates

AD	Adjustable differential
BK	Remote electronics flat-surface mounting bracket (R housing only)
PK	Pipe mounting kit - BK accessory required (R housing only)
PP	Fiber tag with customer-specified information
PY	Powder Coat epoxy coating. No coating on stainless steel parts or plated screws. (500 hours-salt spray)
RR	SS wired-on nameplate with customer information
TT	SS nameplate permanently affixed to housing with customer-specified information
VV	Fungicidal varnish applied to housing exterior
YY	Epoxy coating applied to housing exterior (200 hours-salt spray)
	Individual Certificates
C1	Certificate of Calibration
C3	Inspection
C4	Compliance/Conformance
C6	Insulation Resistance
D1	Certificate of Origin
D2	Manufacturer's Certification

681	K	7	TT YY	← Model Number

Agency Approval

There are no third-party approvals at this time.

660 Series Multi-Point RF Switch

The 660 Series provides the options of multiplepoint switching plus narrow and wide differential switching. By combining these features, the 660 Series units can be used for a wide variety of control needs. The available switching combinations are designed to provide multiple alarms, pump/valve control, or a combination of alarms and equipment control. The 660 Series makes it possible to combine up to four singlepoint devices into one package for lower costs and reduced maintenance.

Features

- Up to 4-point indication
- Suitable for 12 VDC service
- FM Approved and CSA Certified for hazardous locations
- Field-selectable failsafe
- Resists process media coating

Switching Combinations

The 660 Series has eight different combinations of fixed differential and/or adjustable differential switching points. Each unit is equipped with one of four discreet switching points. These points can be used to provide true point level sensing with no level differential, or latched together to provide wide, adjustable differential.

See page 11 for available combinations. Required combinations are selected using step 1 in the How to Order chart on page 10.

Product Specifications

Input Power	120 VAC, 50/60 Hz 240 VAC, 50/60 Hz 24 VDC, 12 VDC
Output Type	10A DPDT, 250 VAC 10A DPDT, 30 VDC DC rating shown for resistive loads
Adjustment Range	0 to 2000 pF
Sensitivity	0.5 pF
Repeatability	0.5%
Failsafe	Field-selectable
Maximum Current Draw	12 VDC - 245 mA 24 VDC - 123 mA 120 VAC - 74 mA 240 VAC - 36 mA
Response Time	0.5 second (standard)
Time Delay (optional)	0 to 30 seconds
Enclosure Environmental Protection	NEMA 4X; IP65
Electrostatic Discharge Protection	8000 volts
Line Surge Suppression	1000 volts line voltage EMC
Conduit Connection	1" NPT(F)
Maximum Remote Distance from Sensor	4000 feet (1219.2 m)
Ambient Temperature Range	-40 to 160°F (-40 to 71°C)
Process Temperature Range	Probe Dependent
Maximum Probe Pressure	Probe Dependent
Weight	J Housing: 9 lbs. (4.1 kg) R Housing: 11 lbs. (5 kg) W Housing: 6 lbs. (2.7 kg)

RF Capacitance Level Controls

How to Order

The Series 660 is comprised of two parts. The first is the electronics and housing. The second is the probe. Refer to pages 21-25 for probe model number.

Model Number System

66 3 J5-TDVV

Electrical Housing (2)

Integral housing	J
Explosion-proof remote housing (4000 feet [1219.m] maximum)	R

Switching Combination (1)

See page 11 for switching combinations.

Single fixed differential switching point	1
Two fixed differential switching points	2
Three fixed differential switching points	3
Four fixed differential switching points	4
Single adjustable differential switching	5
High-level fixed differential point and adjustable differential switching	6
Single adjustable differential and low-level fixed differential point switching	7
High- and low-level fixed differential points and adjustable differential switching	8

* Electronics and probe must have the same agency to maintain the listing integrity (i.e. CS or AI electronics with CS probe, or FM or FI electronics with FM probe).

Power Supply (3)

5	12 VDC
6	24 VDC
7	120 VAC
8	240 VAC

Accessories & Certificates (4)

BK	Remote electronics flat surface mounting bracket (R housing only)
CS	CSA explosion-proof listing*
FM	FM explosion-proof listing*
PK	Pipe mounting kit- BK accessory required (R housing only)
PP	Fiber tag with customer-specified information
PY	Powder Coat epoxy coating. No coating on stainless steel parts or plated screws. (500 hours-salt spray)
RR	SS wired-on nameplate with customer-specified information
TD	Time delay for each fixed differential set point
TT	SS nameplate permanently affixed to housing with customer-specified information
VV	Fungicidal varnish applied to housing exterior
YY	Epoxy coating applied to housing exterior (200 hours-salt spray)

Individual Certificates

C1	Certificate of Calibration
C3	Inspection
C4	Compliance/Conformance
C6	Insulation Resistance
D1	Certificate of Origin
D2	Manufacturer's Certification

66	3	J	5	TD VV	← Model Number

Agency Approval

Agency	Safety Method	Approval	Model(s)
FM	Explosion Proof	Class I, Groups B, C, D Class II, Groups E, F, G Class III, Division 1	66x-Jx-FM 66x-Jx-FM
CSA	Explosion Proof	Class I, Groups C, D Class II, Groups E, F, G Class III, Division 1	66x-Jx-CS 66x-Rx-CS

Connection Cable

Remote units require #22AWG shielded twisted pair cable to connect the control to the probe. The maximum length of this cable is 4000 feet (1219.2m).

A 25 ft. (7.6m) cable is supplied with each unit. Other lengths can be ordered per the information below. The cable glands supplied with the unit must be replaced with suitable fittings when installing conduit.

Series 660 Switching Combinations

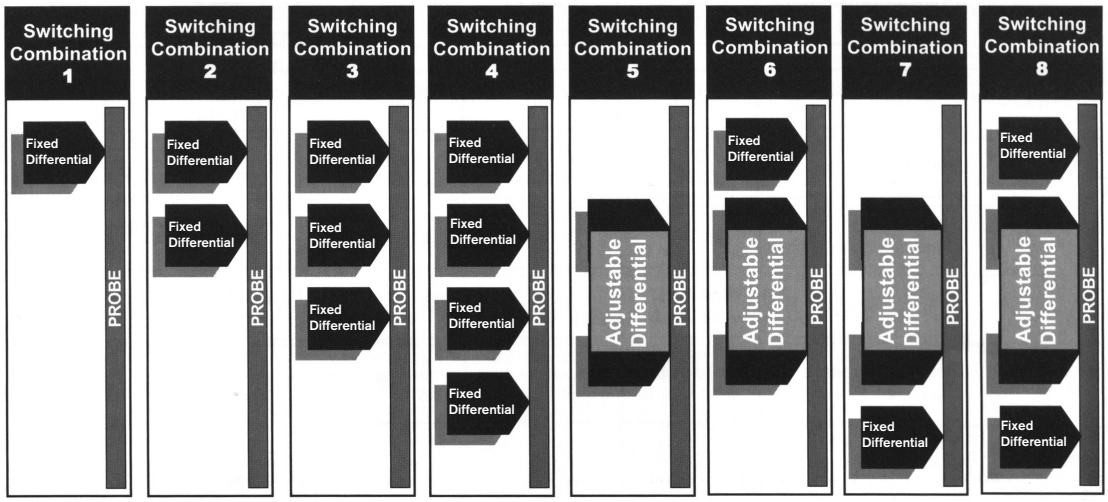

670 RF Transmitter

The 670 provides continuous level measurement and a 4-20 mA linear output. It is a high-performance, general-purpose level transmitter that is well suited for many demanding applications that other technologies cannot handle.

Features

- FM Approved, CSA Certified hazardous locations
- Easy calibration
- Electrostatic discharge protection up to 4000 volts
- Resists process media coating

Product Specifications

Input Power	12-55 VDC 12-30VDC for Intrinsically Safe
Output Type	4-20 mA
Loop Resistance	600 ohms maximum @ 24 VDC
Zero Range	0 to 500 pF
Span Range	50 to 2000 pF
Accuracy	±1.0% of span
Linearity	±0.5% of full scale
Sensitivity	0.5 pF
Repeatability	±0.5% of full scale
Response Time	0.1 second
Enclosure Environmental Rating	NEMA 4X; IP65
Electrostatic Discharge Protection	4000 volts
Conduit Connection	3/4" NPT
Maximum Remote Distance from Sensor	10 ft. (3m)
Ambient Temperature Range	-40 to 160°F (-40 to 71°C)
Process Temperature Range	Probe Dependent
Maximum Process Pressure	Probe Dependent
Weight	2.5 lbs. (1.2 kg) plus 2 lbs. (1 kg) for remote

RF Capacitance Level Controls

How to Order

The 670 consists of two parts. The first is the electronics and housing. The second is the probe. For probe types and model numbers, see pages 21-25.

Model Number System

670 R 9-BKPK

670 RF Transmitter with loop-powered remote housing, flat-surface mounting bracket and pipe mounting kit.

Electrical Housing 1

Integral Housing	K
Remote housing - 10 feet (3m) maximum	R

Order remote cable as 670-XX-S
XX= cable length in feet

* Electronics and probe must have the same agency to maintain the listing integrity (i.e. CS or AI electronics with CS probe, or FM or FI electronics with FM probe).

2 Accessories & Certificates

AI	CSA Intrinsically Safe*
BK	BK Remote electronics flat surface mounting bracket (R housing only)
CS	CS CSA Explosion Proof*
FI	FI FM Intrinsically Safe*
FM	FM FM Explosion Proof*
PK	PK Pipe mounting kit - BK accessory required (R housing only)
PP	PP Fiber tag with customer-specified information
PY	PY Powder Coat epoxy coating. No coating on stainless steel parts or plated screws. (500 hours-salt spray)
RR	RR SS nameplate permanently affixed to housing with customer-specified information
TT	TT SS nameplate permanently affixed to housing
VV	VV Fungicidal varnish applied to housing exterior
YY	YY Epoxy coating applied to housing exterior (200 hours-salt spray)
	Individual Certificates
C1	Certificate of Calibration
C3	Inspection
C4	Compliance/Conformance
C6	Insulation Resistance
D1	Certificate of Origin
D2	Manufacturer's Certification

670	R	9	BK PK	← Model Number

Agency Approval

Agency	Safety Method	Approval	Model(s)
FM	Explosion Proof	Class I, Groups C, D Class II, Groups E, F, G Class III, Division 1	670x9-FM
	Intrinsically Safe	Class I, Groups A, B, C, D Class II, Groups E, F, G Class III, Division 1	670x9-FI
CSA	Explosion Proof	Class I, Groups C, D Class II, Groups E, F, G Class III, Division 1	670x9-CS
	Intrinsically Safe	Class I, Groups A, B, C, D Class II, Groups E, F, G Class III, Division 1	670x9-AI

Housing: K for Model 651

Dimensions in this catalog are for reference only. They may be changed without notice. Contact the factory for certified drawings for a particular model number. Dimensions in this catalog are expressed as millimeters over inches. (Linear = mm/in.)

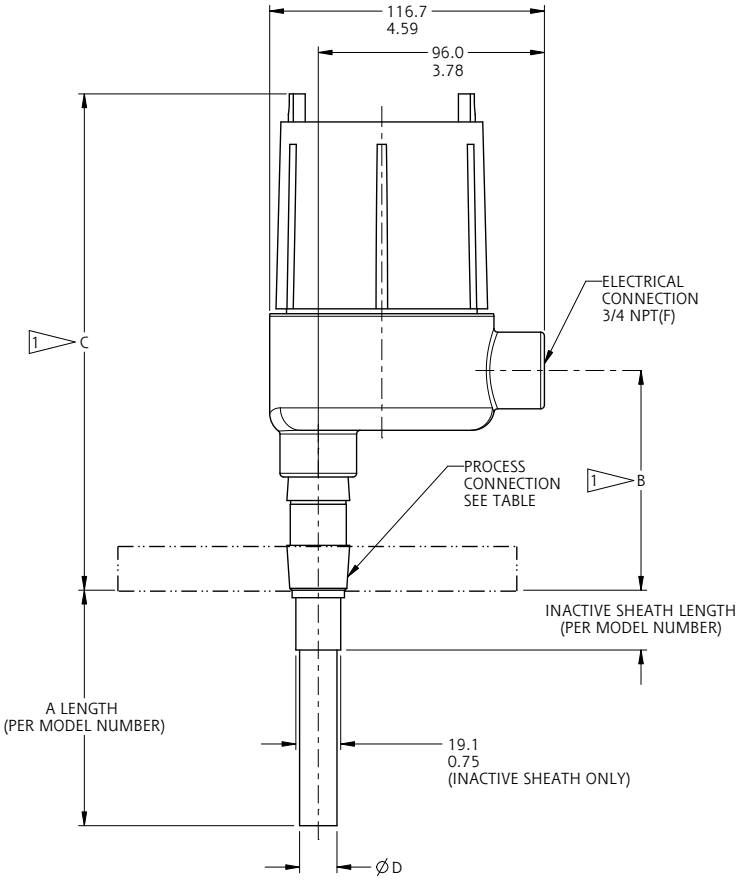

1 DIMENSION APPROXIMATE AND BASED ON A FIVE THREAD ENGAGEMENT.		
PROCESS CONNECTION	DIM B	DIM C
3/4 NPTM	94.1 3.71	211.6 8.33
1, 1-1/2, & 2 NPTM	97.3 3.83	214.8 8.46
FLANGED	158.5 6.24	276.0 10.87
STILLING WELL	120.0 4.72	237.5 9.35

SENSOR STYLE	ØD
BARE	12.7 0.50
SHEATH	15.9 0.63
BARE WITH STILLING WELL	26.7 1.05
SHEATH WITH STILLING WELL	26.7 1.05
INACTIVE SHEATH	15.9 0.63

Drawing 0390652

Linear = mm / in.

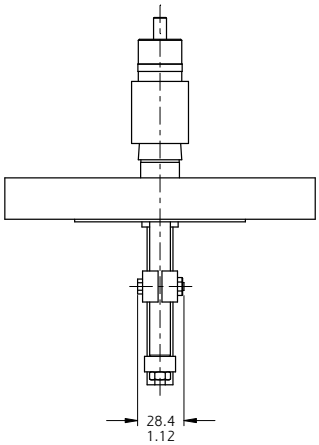

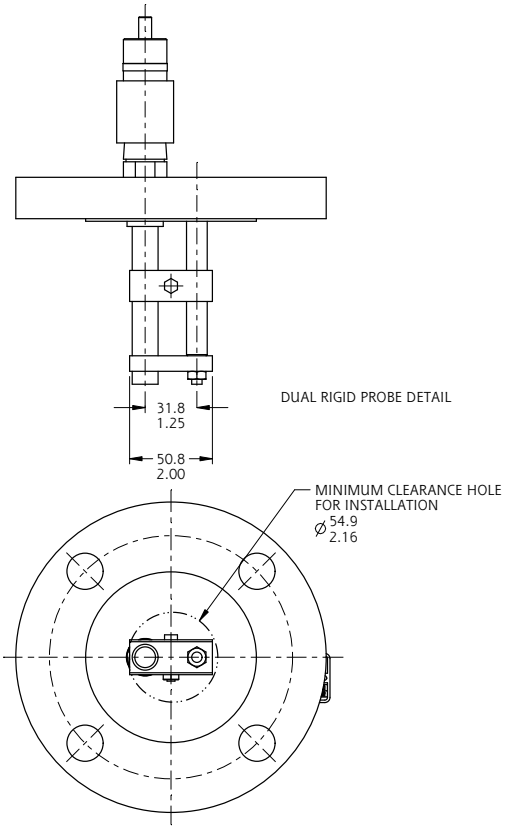

Housing: R for Model 670 & 681

SENSOR STYLE	DIM D
BARE	12.7 0.50
SHEATH	15.9 0.63
BARE WITH STILLING WELL	26.7 1.05
SHEATH WITH STILLING WELL	26.7 1.05
INACTIVE SHEATH	15.9 0.63

1 DIMENSION APPROXIMATE AND BASED ON A FIVE THREAD ENGAGEMENT.

PROCESS CONNECTION	DIM B	DIM C
3/4 NPTM	94.1 3.71	159.2 6.27
1, 1-1/2, & 2 NPTM	97.3 3.83	162.4 6.39
FLANGED	158.5 6.24	223.7 8.81
STILLING WELL	120.0 4.72	185.1 7.29

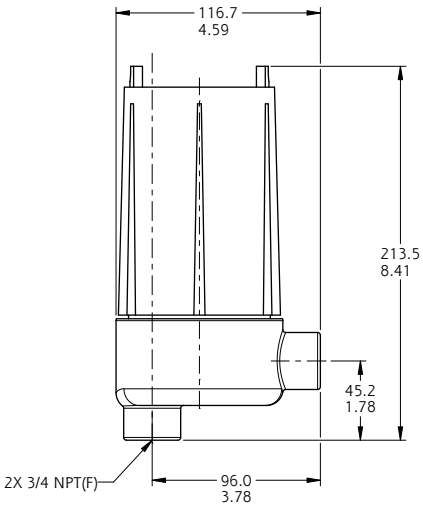

ELECTRONICS HOUSING

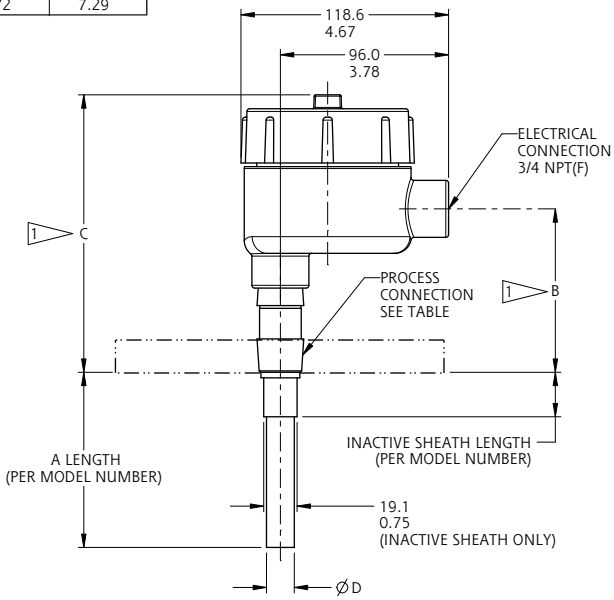

SENSOR

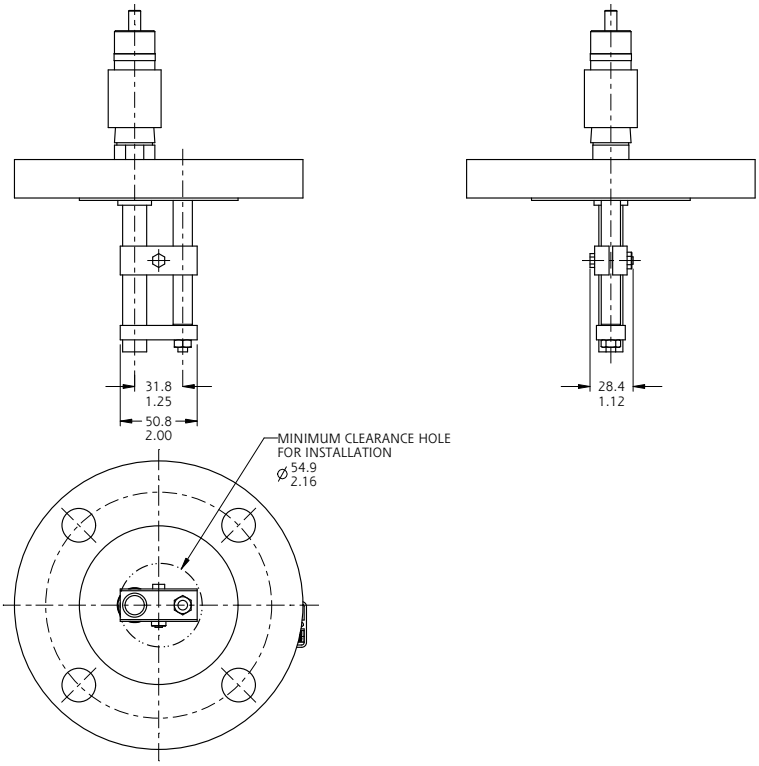

Linear = mm / in.

Drawing 0390653

Housing: K for Model 670 & 681 (RF Probe Model 651-K9)

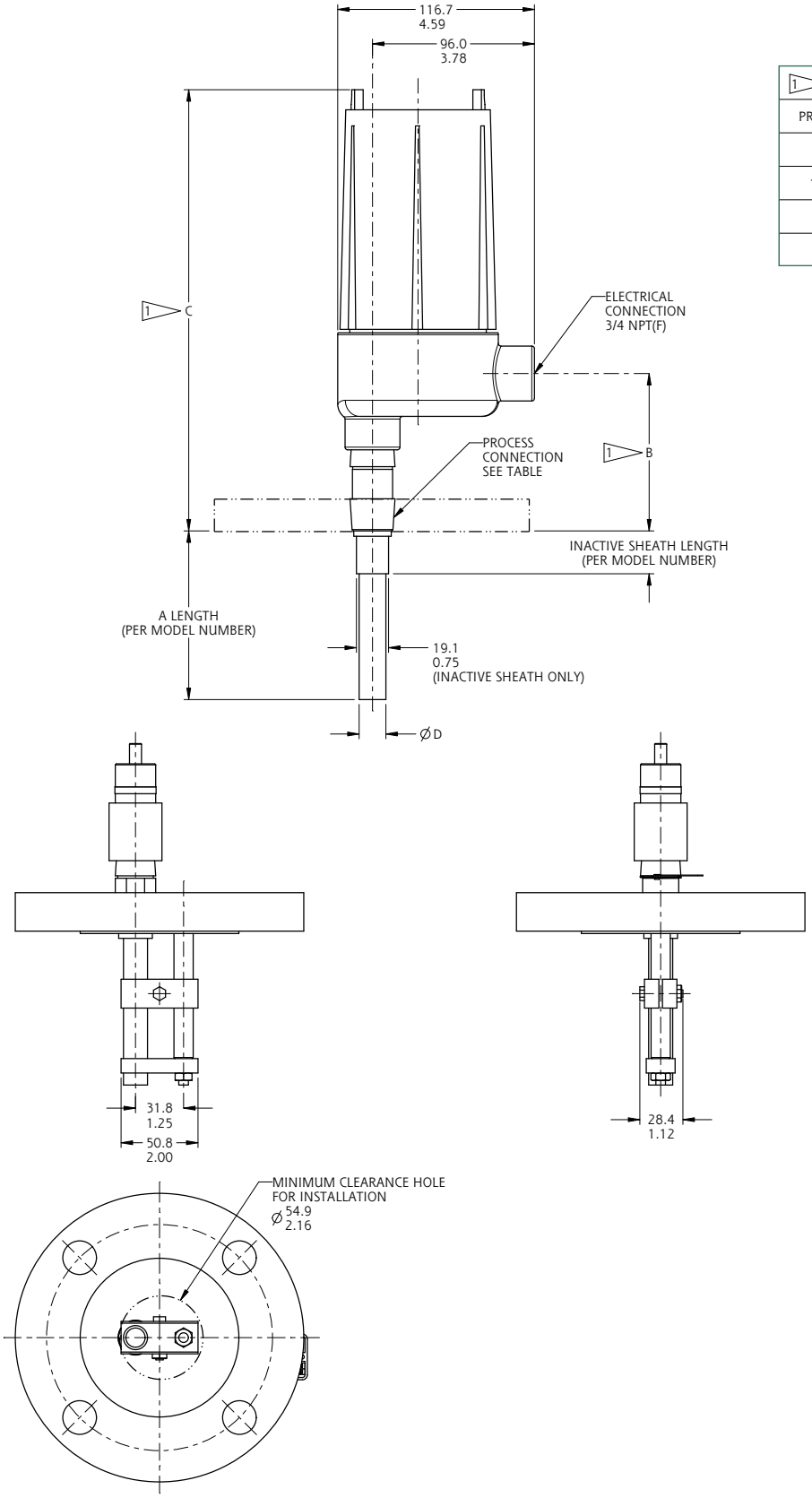

1 DIMENSION APPROXIMATE AND BASED ON A FIVE THREAD ENGAGEMENT.		
PROCESS CONNECTION	DIM B	DIM C
3/4 NPTM	94.1 3.71	262.4 10.33
1, 1-1/2, & 2 NPTM	97.3 3.83	265.6 10.46
FLANGED	158.5 6.24	326.8 12.87
STILLING WELL	120.0 4.72	288.3 11.35

SENSOR STYLE	Ø D
BARE	12.7 0.50
SHEATH	15.9 0.63
BARE WITH STILLING WELL	26.7 1.05
SHEATH WITH STILLING WELL	26.7 1.05
INACTIVE SHEATH	15.9 0.63

Linear = mm / in.

Drawing 0390654

Housing: J for Model 66X

Drawing 0390656

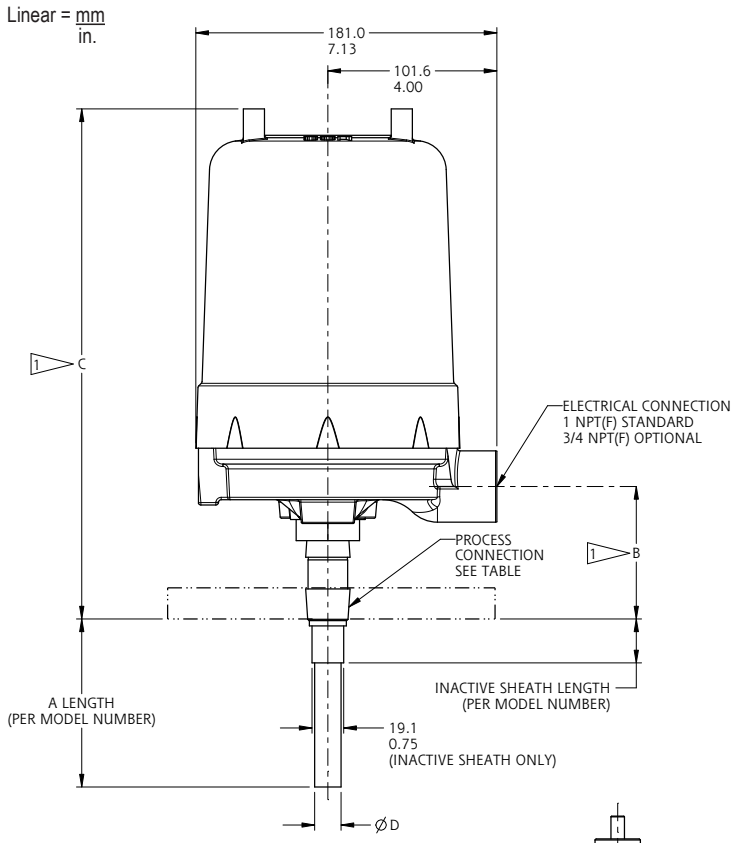

PROCESS CONNECTION	DIM B	DIM C
3/4 NPTM	78.6 3.10	305.6 12.03
1, 1-1/2, & 2 NPTM	81.8 3.22	308.8 12.16
FLANGED	183.9 7.24	370.1 14.57
STILLING WELL	104.5 4.11	331.5 13.05

1 DIMENSION APPROXIMATE AND BASED ON A FIVE THREAD ENGAGEMENT

SENSOR STYLE	Ø D
BARE	12.7 0.50
SHEATH	15.9 0.63
BARE WITH STILLING WELL	26.7 1.05
SHEATH WITH STILLING WELL	26.7 1.05
INACTIVE SHEATH	15.9 0.63

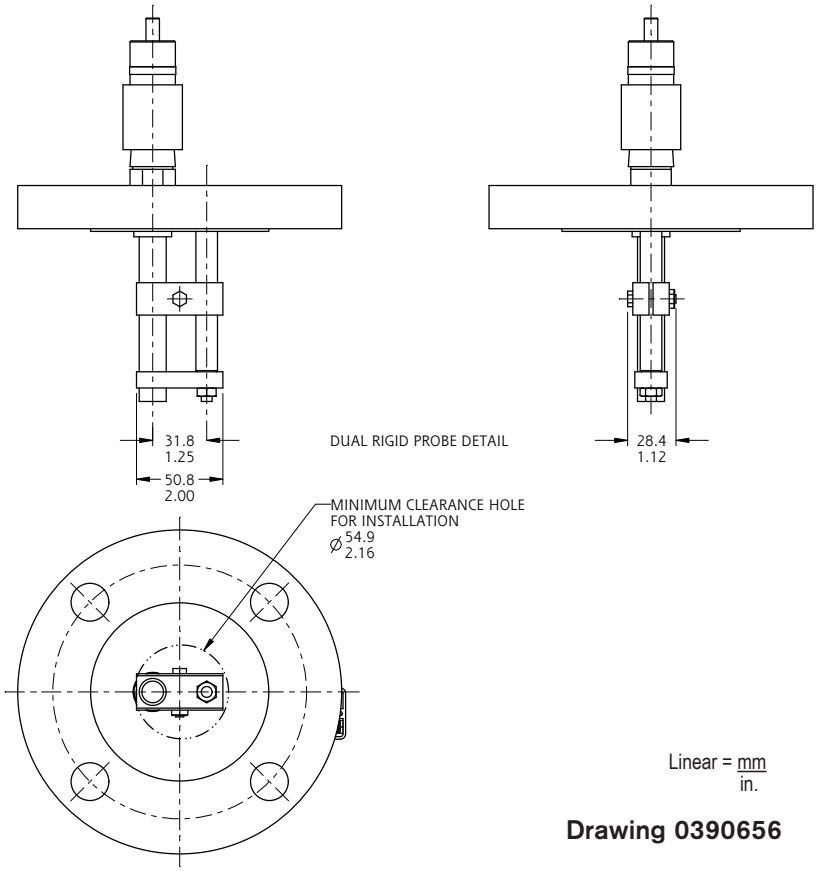

Linear = mm / in.

Drawing 0390656

Housing: R for Model 66X

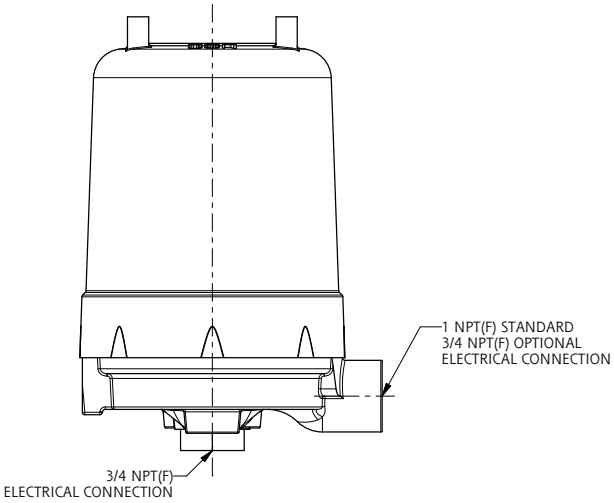

ELECTRONICS HOUSING

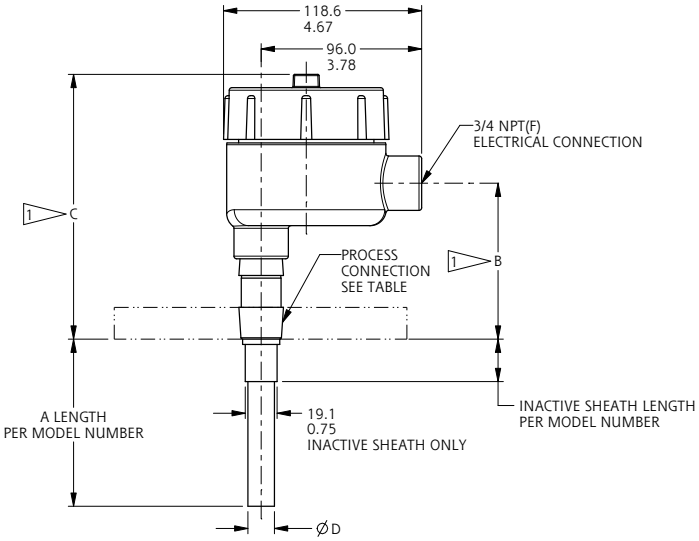

SENSOR

PROCESS CONNECTION	DIM B	DIM C
3/4 NPT (M)	94.1 3.71	159.2 6.27
1, 1-1/2, & 2 NPT (M)	97.3 3.83	162.4 6.39
FLANGED	158.5 6.24	223.7 8.81
STILLING WELL	120.0 4.72	185.1 7.29

SENSOR STYLE	Ø D
BARE	12.7 0.50
SHEATH	15.9 0.63
BARE WITH STILLING WELL	26.7 1.05
SHEATH WITH STILLING WELL	26.7 1.05
INACTIVE SHEATH	15.9 0.63

1 DIMENSION APPROXIMATE AND BASED ON A FIVE THREAD ENGAGEMENT

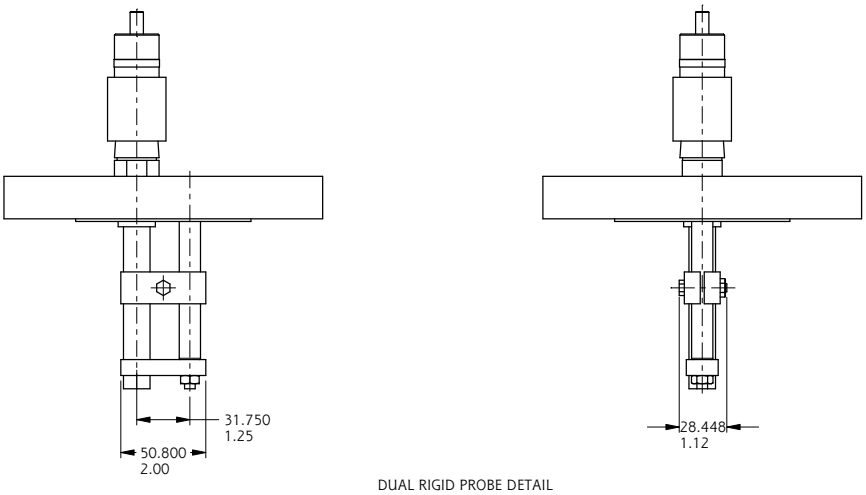

DUAL RIGID PROBE DETAIL

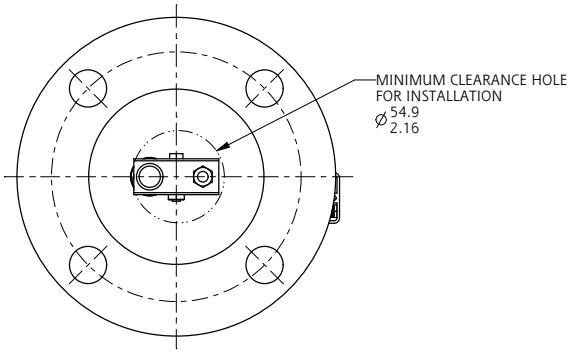

Linear = mm / in.

Drawing 0390657

Selection Guidelines

Selecting the right probe for your application is very important. The objective is to maximize the amount of capacitance change for every inch (cm) of level change. Following are general guidelines for selecting a probe for a particular application. Please consult with SOR® or your local SOR sales representative for additional and/or specific information.

1. If process media is non-conductive - less than 10µ Siemens/low dielectric (less than 10), select a bare probe. If there is any water in the process, go to number 2.
2. If process media is conductive - greater than 10µ Siemens/high dielectric (greater than 10), select an insulated probe.
3. If process is non-conductive and in a horizontal (bullet) tank, or if the probe must be mounted more than 12 inches from the vessel wall, select a stilling well, dual-rod or dual-cable probe.
4. If vessel is non-metallic, select a stilling well, dual-rod or dual-cable probe.
5. Use rigid probes for measurement lengths of 10 feet or less. Use cable probes for longer ranges.
6. For agency-listed controls, a matching agency listing must be specific on the probe. Available probe agency listings are provided in the following charts and specification pages.

Rigid Probes - Sheathed

Single Rigid Sheath Probe

Model Number	Probe Material	Sensor Diameter	Spanned Capacitance in Water	Process Temperature Limits	Weight
CB	Teflon® sheath	5/8" (15.9 mm")	10 pF/in.	-100 to 400°F (-73 to 204°C)	1 lbs. (0.5 kg) +0.7 lb. (0.3 kg) per foot of probe

Rigid Sheath Probe with Stilling Well

Model Number	Probe Material	Sensor Diameter	Spanned Capacitance in Water	Process Temperature Limits	Weight
CC	Teflon® sheath inside 316SS stilling well	1.05" (26.7 mm")	12 pF/in.	-100 to 400°F (-73 to 204°C)	2 lbs. (0.9 kg) +1.5 lb. (0.7 kg) per foot of probe

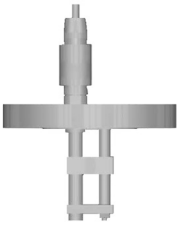

Rigid Sheath Dual Probe

Model Number	Probe Material	Sensor Diameter	Spanned Capacitance in Water	Process Temperature Limits	Process Pressure	Weight
CD	Teflon® sheath and 316SS ground probe	1/2 & 5/8" (12.7 & 15.9 mm)	10 pF/in.	-100 to 400°F (-73 to 204°C)	Pressure per CB probe or flange rating, whichever is lower	12 lbs. (5.5 kg) +1.5 lb. (0.7 kg) per foot of probe

Rigid Probes - Sheathed

Single Inactive Sheath Probe

Model Number	Probe Material	Sensor Diameter	Spanned Capacitance in Water	Process Temperature Limits	Weight
CJ	Teflon® sheath 316SS sheath	5/8 & 3/4" (15.9 & 19.1 mm)	10 pF/in.	-100 to 400°F (-73 to 204°C)	1 lb. (0.5 kg) +0.7 lb. (0.3 kg) per foot of probe

Rigid Probes - Bare

Single Rigid Bare Probe

Model Number	Probe Material	Sensor Diameter	Spanned Capacitance in Water	Process Temperature Limits	Weight
CA	316SS	1/2" (12.7 mm)	N/A	-100 to 400oF (-73 to 204oC)	1 lb. (0.5 kg) +0.7 lb. (0.3 kg) per foot of probe

Single Rigid Bare Probe with Stilling Well

Model Number	Probe Material	Sensor Diameter	Spanned Capacitance in Water	Process Temperature Limits	Weight
CE	Bare 316SS probe inside 316SS stilling well	1.05" (26.7 mm")	N/A	-100 to 400°F (-73 to 204°C)	2 lbs. (0.9 kg) +1.5 lb. (0.7 kg) per foot of probe

RF Capacitance Level Controls

Model Number System

CB C-8A-CS-12-TT

3 Process Connection

3/4" NPT	8A
1" NPT (Required size on CC and CE probes)	1A
1-1/2" NPT	9A
2" NPT	2A
1" 150# ANSI RF Flange	1C
1-1/2" 150# ANSI RF Flange	9C
2" 150# ANSI RF Flange	2C
3" 150# ANSI RF Flange (3C, 3D, 4C, 4D only on CD & CP probes)	3C
4" 150# ANSI RF Flange	4C
1" 300# ANSI RF Flange	1D
1-1/2" 300# ANSI RF Flange	9D
2" 300# ANSI RF Flange	2D
3" 300# ANSI RF Flange	3D
4" 300# ANSI RF Flange	4D

2 Sensor Material

316SS Standard	C

1 Sensor Style

Rigid 316SS Single Probe	CA
Rigid Teflon Single Probe	CB
Rigid Teflon Single Probe with Stilling Well	CC
Rigid Teflon Dual Probe (316SS Ground)	CD
Rigid 316SS Single Probe with Stilling Well	CE
Rigid Teflon Single Probe with 3/4" OD Inactive Sheath	CJ

4 Agency Approval

00	No Agency Approvals required
CS	CSA (not available on CA, CE)*
FM	FM (not available on CA, CE)*
MB	IECEX (not available on CA, CE, CJ)*
NM	INMETRO (not available on CA, CE, CJ)*

* Electronics and probe must have the same agency to maintain the listing integrity (i.e. CS or AI electronics with CS probe, or FM or FI electronics with FM probe).

5 Sensor Length

XXX.X

Sensor length in inches. Lengths are 5 places including the decimal and leading zeros (see Accessories for different units). Sensor style CJ requires a sensor length followed by an inactive sheath length. See page 23 for limits of probe length.

Note: Inactive sheath length must be at least 6" shorter than sensor length

6 Accessories & Certificates

FT	Probe length specified in feet (ft.)
MK	Probe length specified in meters (m)
ML	Probe length specified in centimeters (cm)
PP	Fiber tag with customer-specified information
RR	SS tag wired on with customer-specified information
TT	SS tag riveted on with customer-specified information

Individual Certificates

C2	Hydrostatic Pressure Test
C8	Typical Material of Wetted Parts
D1	Certificate of Origin
D2	Manufacturer's Certification

1	2	3	4	5	6	
CB	C	8A	CS	00012	TT	← Model Number

RF Capacitance Level Controls

Agency Approval

Agency	Safety Method	Approval	Model(s)
FM	Explosion Proof	Class I, Groups B, C, D Class II, Groups E, F, G Class III, Division 1	CB, CC, CD and CJ
CSA	Explosion Proof	Class I, Groups C, D Class II, Groups E, F, G Class III, Division 1	CB, CC, CD and CJ
IEC	Intrinsically Safe	Ex ia IIB T4	CB, CC and CD
INMETRO	Intrinsically Safe	Ex ia IIB T4	CB, CC and CD

Probe Insertion Lengths

Probe Type	Length (inch)		Length (cm)	
	Minimum	Maximum	Minimum	Maximum
CA	3.5”	234”	8.89	594.4
CB	1.5”	234”	3.81	594.4
CC	2”	234”	5.08	594.4
CD	2”	120”	5.08	304.8
CE	4.5”	234”	5.08	594.4
CJ	7”	120”	17.78	304.8
Sheath*	1”	114”	2.54	289.6

*Sheath length must be selected with CJ only.

Flange Weight and Pressure Rating

Process Connection	Add to Shipping Weight	Maximum Pressure Rating
1C	2 lbs. (1.0 kg)	275 psig (19 bar)
9C	4 lbs. (1.8 kg)	275 psig (19 bar)
2C	5 lbs. (2.3 kg)	275 psig (19 bar)
3C	9 lbs. (4 kg)	275 psig (19 bar)
4C	17 lbs. (8 kg)	275 psig (19 bar)
1D	3 lbs. (1.5 kg)	720 psig (50 bar)
9D	6 lbs. (2.7 kg)	720 psig (50 bar)
2D	8 lbs. (3.6 kg)	720 psig (50 bar)
3D	16 lbs. (7.5 kg)	720 psig (50 bar)
4D	27 lbs. (12.5 kg)	720 psig (50 bar)

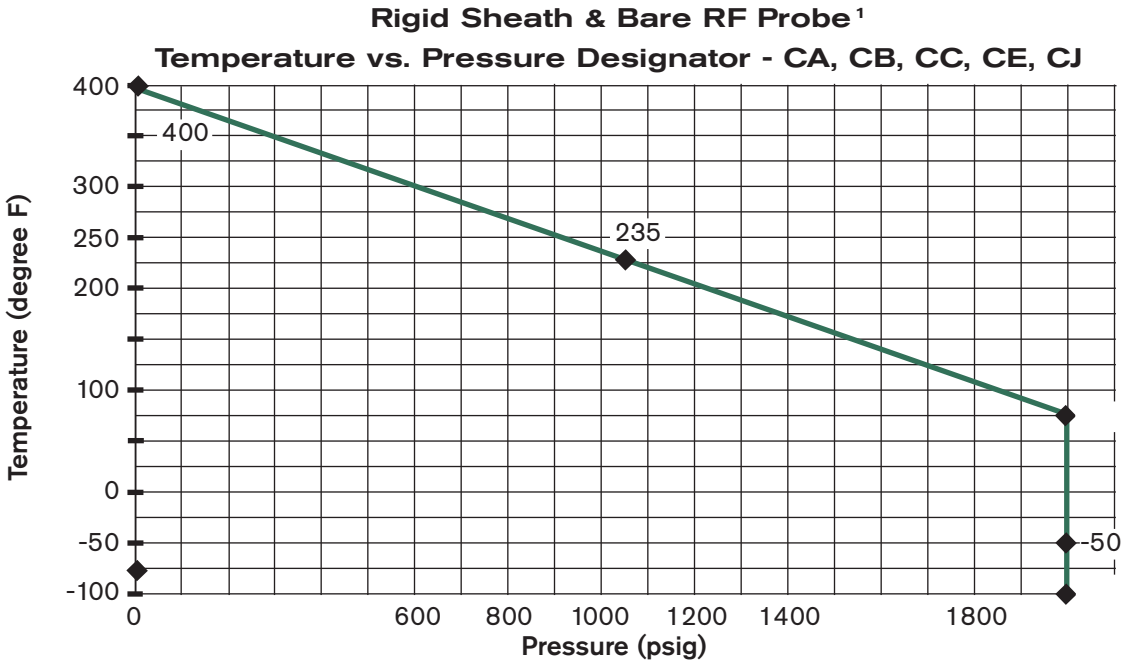

Notes

1. Standard pressure rating: 2000 psi @ 70°F.

RF Capacitance Level Controls

Please use the data sheet below to provide SOR with specific details of your application. This will allow us to help you select the proper model to ensure optimum performance.

General	Tag Number		Company
	Application	❍Level/❍Interface	Address
	Function		
	Area Classification	❍Hazardous/❍Non-Hazardous	
	Agency Approval		
Sensor	Probe Model		Contact Name
	Orientation	❍Vertical/❍Horizontal	Phone
	Style		Fax
	Process Wetted Materials		E-mail
	Insertion (in/cm)	_____ ❍in/❍cm	Rep Company
	Process Connection Size		Rep Contact
Control	Location	❍Integral/❍Remote	SKETCH **APPLICATION** HERE
	Enclosure Class		Please indicate mounting location as well as other connections and internal obstructions.
	Conduit Connection		
Switch	Electronics Model		
	Power Supply		
	No. of Setpoints		
	Type	❍Relay/❍8 or 16 mA	
	Quantity/Form	_____ x ❍SPDT/❍DPDT	
	Rating Type	❍AC/❍DC	
	Rating: Amps	_____ Amps	
	Load Type	❍Inductive/❍Non-Inductive	
	Setpoint Location	Measured from Process Connection (show on drawing)	
Transmitter	Output		
General Application Conditions	Measurement Range		
	Process Media Name		
	Vessel Shape	❍Vert. Cylinder/❍Horiz. ❍Cylinder/❍Sphere	
	Vessel Material		
	Vessel Lining	❍Yes/❍No Mat'l. _____	
	Press Max. Normal		
	Temp. Max. Normal		
	Ambient Temp. Range		
	Solids (%)		
	Specific Gravity		
	Viscosity (cp)	_____(cp)	
	Turbulence	❍Yes/❍No	
	Process Coating	❍Yes/❍No	
Float/Displacer	Vibration Mixing	❍Yes/❍No	
RF Instruments	Upper Fluid Name		
	Dielectric Constant		
	Lower Fluid Name		Notes (list any special options)
	Dielectric Constant		
Ultrasonic Switches	Aeration		
	Suspended Solids (%)		
	Hydrocarbon Vapors	❍Yes/❍No	
Submersible Pressure	Cable Length		
	Nose cone	❍Yes/❍No	

MEASUREMENT AND CONTROL

Lenexa, KS USA | 913-888-2630 | Fax 913-888-0767 | **SORInc.com**

REGIONAL OFFICES

China

SOR China | Beijing, China | china@SORInc.com

+86 10 5820 8767 | Fax +86 10 5820 8770

Middle East

SOR Measurement & Control Equipment Trading DMCC | Dubai, UAE

middleeast@SORInc.com | +971 4 278 9632 | Fax +1 913 312 3596